These articles and information is brought to you by The 1937 and 1938 Buicks Club. For more information please contact us at;

http://autos.groups.yahoo.com/group/1937and1938Buicks/

or

WWW.1937and1938Buicks.com

-- Warning Notice --

It the mission and goal of 1937 and 1938 Buicks Club is to provide information, helpful hints, advice, directions and reference information for the repair, maintenance, authentic restoration and knowledge development in regards to 1937 and 1938 Buick's. Content is offered as informational only.

The 1937 and 1938 Buicks Club does not knowingly accept false or misleading content or advertising. Nor does The 1937 and 1938 Buicks Club assume any responsibility for the consequences that may occur should any such material appear.

The 1937 and 1938 Buicks Club does not guarantee the quality of any information which is included in this or any other publication. Under no circumstances shall The 1937 and 1938 Buicks Club be liable for any damages, losses, or injuries resulting from use reliance on the content of this or any other publication. Any reliance on this or any other publication content is at your own risk.

As a precautionary measure, The 1937 and 1938 Buicks Club strongly recommends that you contact a professional mechanic or restoration shop to check your work or answer specific questions.

-- Copyright Notice --

All rights reserved. All documents and publications on The 1937 and 1938 Buicks Club web site or that can be down loaded from The 1937 and 1938 Buicks Club web site are protected under both U.S. Federal copyright law and international treaties. No component of this site, including text, images and computer code, may not be reproduced or copied in any form or by any means--electronic, graphic, digital or mechanical, including photocopying or information storage & retrieval systems--without the express prior written permission of The 1937 and 1938 Buicks Club.

GENUINE Buick PARTS

37-38
SWAP N' SELL
NEWS BULLETIN
1569 WABASH AVE.
SPRINGFIELD, IL 62704

Mailed 360 copies Cost $105.00 Included Postage 1-May-13 Pos

Dear Buick Lover:

The responce to my letter has been very good. I am recieving about 10 letters per day. It is too early to project how many members we can get to join the club. I am going to start the club with this first news bulletin and hope for the best. At this point it is very difficult to project the finances so I am going to risk my money to start.

The main thing I need from the members is to participate..... I will need.. #1 Cars For Sale #2 Parts For Sale #3 Parts Wanted #4 Opinions on Vendors you have had expierence with.. Good or Bad. This is a good forum to let other owners know where the best deal is and who to stay away from. #5 Any technical information to make your restoration go a little easier. Plese Help.....

For now I can not promise how often the news letter will be publish-- It will cost around $250.00 each time and even more if we want pictur in the letter. All I can do is assure you all membership funds will be applied to the publication. I am not doing this for a living but as a hobby I enjoy very much. Please fill out the application Below as this will be the last news letter unless you join.....

Cut _____ Cut

Application 37-38 Buick Club

Name: _____

Address: _____

City: _____

State: _____ Zip:

Phone: _____ (Home)

Model Car: _____ Year _____

Condition: _____ (Scale from 1 to 10)

GENUINE Buick PARTS

Dues. $20.00 per year

Model No. 66-S, Opera seats

Membership Dues:

I have given this a lot of thought and an educated guess is the dues at least for the first year will be $20.00 per year. I sent out seven hundred letters to soliciate the club. So far I have received over 150 replys. They are still coming in at about 10 per day. At bes our total membership will probably be around 300. Publication cost and postage can run anywhere from $250.00 to $500.00 per month if we run o a monthly basis. Assuming we get 300 members at $20.00 per year we wil be covered to have a monthly publication. If the membership rises we can reduce the fees next year. Now on the grim side.... If only a few people join there will not be enough money to cover the first publicat You must understand from the start that for the #2 Bulletin to be published I must have paying members. The bottom line is you may be out $20.00 if the members don't join. But don't feel too bad I will be out three or four hundred. If you understand the risk then lets g started. As a final thought... Your membership in the National Buick Club is $15.00 per year. If you are lucky you will see two or three items related to 37 or 38's. This Club is only 37 & 38's. I think you will find this much more interesting. Please don't stop your membersh in the National Buick Club. Our Club is not in competition with the National BCA. My sole purpose is to give more help where it is needed.

Thank You,
Dave Lewis
Dave Lewis B.C.A. 10819

EIGHT-PASSENGER LIMOUSINE
Model No. 90-L, Trunk back. Fender well only

Requirements For Membership in 37-38 National Buick Club: #1

#1 You must be the Proud Owner of any Model 37 or 38 Buick.

#2 You must understand the sole purpose of this Club is to further the Restorations of 37 & 38 Buicks. The Club will reject any member who tries to use this forum to make money or decieve anyone.

#3 Your particapation is expected in some form..... You will be expected to write in your comments as to Parts for Sale or Trade.. Parts Wanted. Local Club activities Technical Tips to other members. Stories on your restoration or volunteer your help in any restoration projects the club may be involved with. In short you will be expected to particapate.....

#4 Your Dues must be paid currently to cover Publication Costs.

#5 You must understand this publication is on a purely speculative venture to start. If membership is low you could possibly lose your first years membership.

P.S. I have invested over $400.00 to start this and feel very strongly we will have a Monthly News letter

Advertising: All Members will have the right to Free Advertising. Please include your Phone numbers if possible. You should list every part you would like to sell with a good description so everyone will know the condition. Include prices if possible also. I will have Commercial Rates soon. For now I will print any Vendors Name & Address No Charge. Please... Only vendors fo 37 & 38 Parts. List what part or service they offer.

P.S. Some people have been sending in lists of parts For Sale for all years. Our only interest in this Club is 1937 & 1938 Buicks. Please use The Bugle for any other years.

1937 and 1938 Model Production
Does not include Exports & Chassis

Special Series

1938 Prod.	Description	1937 Prod
776	40C-5 Pass. 4 dr. Con Phaeton Plain Bk.	1689
79,510	41 -5 Pass. 4 dr. Sdn. Trunk Back	82,440
5,943	44 -5 Pass 2 dr. Sdn. Plain Back	9,330
11,337	46 -2 Pass 2 dr. Bus. Cpe. with Deck	13,742
2,473	46C-4 Pass 2 dr. Conv.Cpe. With Rbl. St.	2,265
5,381	46S-4 Pass 2 dr. Sps. Cpe. With Opr. Sts.	5,059
11,265	47 -5 Pass 4 dr. Sdn. Plain Back	23,312
14,153	48 -5 Pass 2 dr. Sedan	15,936
130,838	Total Production Series 40	153,773

Century Series

1938 Prod.	Description	1937 Prod.
208	60C -6 Pass. 4 dr. Conv. Phaeton Plain Bk.	410
12,364	61 -6 Pass. 4 dr. Sdn. Trunk Back	20,679
0	64 -5 Pass. 2 dr. Sdn. Plain Back	1,117
642	66C -4 Pass. 2 dr. Conv. Cpe. W/Rumble St.	787
1,991	66S -4 Pass. 2 dr. Opera Cpe. Opr. Sts.	2,840
1,515	67 -6 Pass. 4 dr. Sdn. Plain Back	4,750
1,380	68 -5 Pass. 2 dr. Sdn Trunk Back	2,874
18,100	Total Production Series 60	33,457

Roadmaster Series

1938 Prod.	Description	1937 Prod.
350	80C -6 Pass. 4 dr. Phaeton Trunk Bk. Side Mts.	1,040
466	87 -6 Pass. 4 dr. Sedan Plain Back	0
4,505	81 -6 Pass. 4 dr. Sedan Trunk Back	14,637
247	81J -6 Pass. 4 dr. Formal Sdn Trunk Back	452
644	90 -8 Pass 4 dr. Sdn. Trunk Bk. W/Side Mts.	1,592
410	90L -8 Pass. 4 dr. Sdn. Trk. Bk. Div. Wnd.	720
437	91 -6 Pass. 4 dr. Sdn. Trunk Bk. Side Mts.	1,229
0	91J -6 Pass. 4 dr Formal Sdn. Trk. Bk.	156
7,059	Total Production Series 80 & 90	19,826

Technical Tips:

37-38 Series 40 engines. You can convert your Babbitt Rods over to insert bearing by useing the following Rods. They can be found in Buick engines from 1949 to 1951. The Forging number is on the side of the Rod. It is #1336056. With these Rods you can use your standard Pistons. I purchased my Rod & Main Bearings from Terrill Machine to complete the restoration on the engine.

Wheel Cylinders & Master Cylinders; Don't throw away your old because they are pitted bad. Whitepost Restorations can re-sleeve your old with brass and you can then put a stock rebuild kit in.

Running Boards: If your Boards are just worn you can repair the worn spots or the broken corners by using Bondo. Reshape the ends and refill the low spots. Sand back to the proper sizes and paint with Black Rubber paint. This generally works out good. I have found that if you sand blast the board first the Bondo and paint hold extremely well.

Above are some simple Tips I have found to be helpful in my restoration. Please if you can improve on these or have tips of your own... Please write me for the next newsletter.

Photo Courtesy of Brian Hamilton. 1938 Series 41

GENUINE Buick PARTS

37-38

SWAP N' SELL
NEWS BULLETIN
1569 WABASH AVE.
SPRINGFIELD, IL 62704

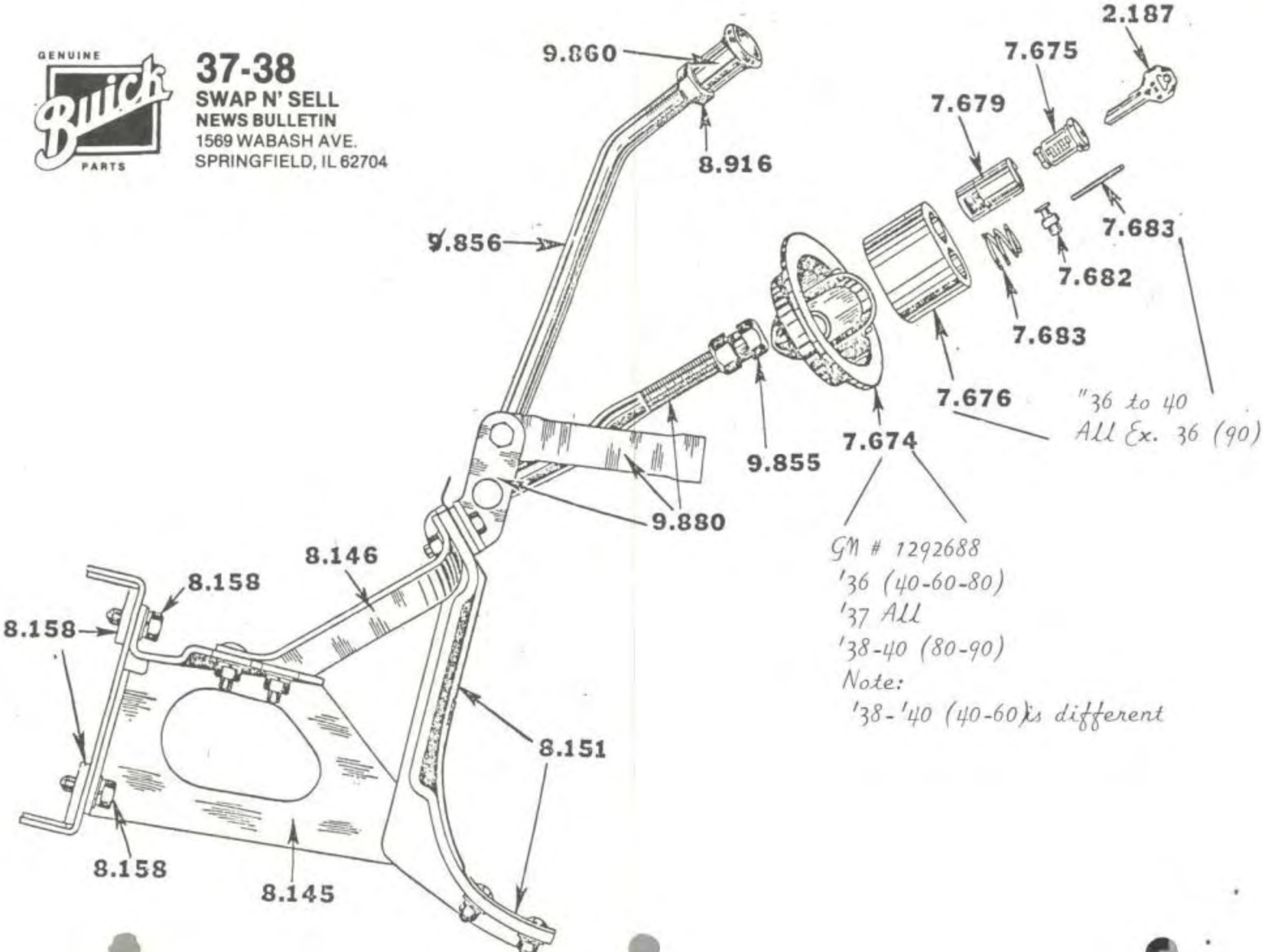

Cars For Sale

37 Series 60 4Dr. Dual Side Mounts-Excellent Condition 100% Original. Thinking of selling and moving on to my next project. Anyone interested? Never advertised before

Robert W. Kroening
Rt.4 Box 196
New Haven , Mo. 63068

---

37 Ser 81 All Restoration completed Frame up. Only 25 Hrs. on New engine. All new original interior. (needs front mat) New Paint, Chrome, Lester W/W Tires, New Glass, Channels. Door rubber and has Radio. Needs very minor detailing to Show Over $7,600 invested asking $6.800

K.M. Garrison
4800 Waterbridge Down
Sarasota. FL. 33580

---

38 ser 46 Coupe-- Car looks as an original New Car. New Paint Color is Van Dyke Brown. New engine. Interior (Mohair) Rebuilt front end- new chrome-window rubber & many other extras. Asking $7,500

Gigler's Body Shop
1355 Grove St.
San Francisco, Cal. 94117

Editors Note; We need more Cars For Sale. Even if you don't have one for sale maybe you know a non member who will sell. We have a very bad shortage of Cars for Sale in the Midwest. A lot of people would like to buy an Old Parts Car. If you have seen any let me know. There are a lot of us looking.

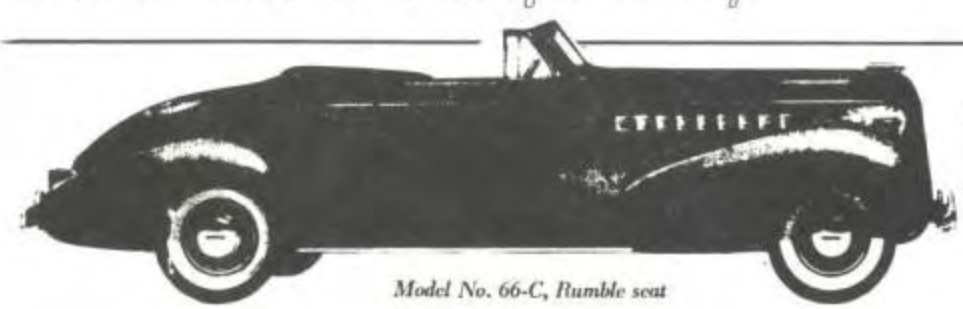

FOUR-PASSENGER

CONVERTIBLE COUPE

Model No. 66-C, Rumble seat

GENUINE Buick PARTS

Parts For Sale

Series 40 Stromberg Rebuilt Carb----$100.00
N.O.S. Starter Switches $20.00 ea.
Assorted Gasket Sets
Reproduction Buick 8 Grill Emblems $24.00 ea.
Reproduction Park Lens $12.00 ea.

Lauren Matley
1732 Monroe Ave S.E.
Renton, Wa. 98055
206-271-2610

---

37 Series 40 Coupe Parts
All Parts are in good condition. Need Cleaning & Paint
Rear Shocks $15.00 ea.
Rear Springs $15.00 ea.
Steering Col & Box $25.00
Pedal Assembly $20.00 set
Front Backing Plates $15.00 ea. includes all hardware
Front Brake Drums &Brg. $15.00ea.

Greg Marshall
14161 Riverton Cir.
Westminster, Cal.
714-897-4217

38- Nose piece of Body. Part that holds Grills
Good Condition

John Rainney
8441 Rondale Drive
Grand Blanc, MI. 48439
313-694-1375

37 and 38 Headlight housing (large outer housing) $20.00 pr.
38 Garnish Moldings $35.00 set
38 Bumper Guards (3) $15.00 ea.
38 Front & Rear Bumpers Re chromable $40.00 ea.
38 Cluth & Brake Pedal Ass. 60 Ser. $25.00 set
38 Century Fuel Tank $30.00
38 Century Rear Arm Rest $15.00
38 40 & 60 ser Rear Fenders $40.00 ea.
37 41 Body (sandblasted) $200.00
38 Century Frame, New Shocks & Bearings $300.00
38 Century Hood & Side Panels $200.00

David Bylsma
1818 Pine Grove Ct.
Severn, MD. 21144
301-551-3189

Trade Only - I have assorted N.O.S. Parts for 37 90L only

L. Nix
P.O. Box 28
Rutledge, GA. 30663

TRADE ONLY 37 & 38 Parts
Side Mount Covers
2-Side Mount Fenders
Four Sets of Running Boards
7-Bumpers
37 ser. 60 Engine
40 & 60 Series Transmissions
A few rear ends and on & on. I will Trade only

James B. Childs
P.O. Box 2536
Hyattsville MD. 20784

37-38 Trans Parts. Ive got a Bucket Full. Send list

Chuck Jones
P.O. Box 838
Sulphr Springs, TX. 75482

37-38 I have five Cars and a lot of good used Parts
Send list of Needs

Don Gust
Rt. 1 Box 161
Beecher, Ill 60401

---

37 & 38 Parts
38 40 se Stromberg Carb $50.00
38 40 ser Intake & Ex. No Cracks $50.00
38 40 ser Trans $75.00
37 40 or 60 Dash-Good Shape $25.00
37 Hood Ornament Good Shape $15.00
Assorted N.O.S. & Used Trans Parts Small & Large Series

William Bob Pipkin- 2516 62ed S.E. -- Salem, OR. 97301

---

38 46S Hood, Good Sheet Metal, Fair Center Section. Pair of Front Fenders (Non Welled) Fair to Rough. No Rust. One Grill, Fair. Misc. Front end parts. One L.R. Fender.

Don Micheletti
2023 Menalto Ave.
Menlow Park. Cal. 94025

For Sale or Trade:
38 41 Ser. Complete Engine (will part out) Clutch. Trans & Grill. N.O.S. Pedal Pads $3.50 ea. Genuine Delco Shock Fluid. $30.00 gal.

Paul Brennan
2343 Werner St.
Marquette, Mich. 49855

GENUINE Buick PARTS

Parts For Sale

---

37 Ser 41 Accessorie Front Bumper Guard. New Chrome. Nice Piece $35.00. Center Trunk Light with both lenses $35.00
Red lens for center trunk light $6.00
Pair of springs & angle brackets to fasten engine splash pans to car $15.00 pr.

Jim Crawford
121 Sylvan Ave.
Rutledge, PA. 19070

---

38 Ser 41 Right Front Fender (Non-Welled)

N.L. McIntyre
Rt.4 Box 365
Corry, PA. 16407

---

38 ser 40- Complete engine condition unknown. 2 sets of pistons one 20 over-one 30 over. also a cam shaft.
Asking $325.00 for all....

Gigler's Body Shop
1355 Grove Street
San Francisco, Cal. 94117

---

37 & 38 Parts Galore

38 Park Light Bases only- $10.00 ea.
38 Bumper Bars-L.F.-L.R.-R.R.- $10.00 ea.
37-38 ser 40 Spark Plug Cover & All Hardware, Cleaned & Painted $35.00
38 Headlight Switch- $7.50
37 and 38 Spare Tire Hold Down Brace- $7.50 ea.
37-38 16" Trim Rings (Wheel)- $10.00 ea. Good Used
37-38 Left Running Boards Rubber Worn-$35.00 -40 Series
37- 60 series Rear End $75.00-Can not Ship
37-60 ser. Cyl Head. Needs rebuilt- $35.00

(FROM OTHER SIDE)

37-60 ser. Short Block. Two Blown Pistons-$100.00
37-40 or 60 Generator. $35.00
37-60 ser. Starter. $35.00
37-60 ser intake & exhaust, Center Cracked on Ex. $35.00
37- Parking Lights complete less insides (bulbs & sockets) $50.00pr.
37 & 38 Many used engine parts for 40 & 60
38 ser 41-Gas Tank. $35.00
38 ser 41 Both Hood Halves, Rusty But Useable $15.00 ea.
38 ser 41 Both Hood Sides, Rusty $15.00 ea.
38 Tail Lights complete with Lenses-$15,00 Ea.
38 Heater with Defroster Motor-$35.00
38-Grills, Shine Good. Need Re-Chrome for Show. $70.00 pair
37-Grills- New- Old Re-Production. Super Chrome. $150.00 pr.
38 ser 40 Running Board Molding Some Dings overall nice. $20.00(1)
38 ser 41- Four Doors for any Part you need
38 ser 41- Complete Rear End-$75.00. Will not Ship
38 ser 41 Four Brake Drums. $10.00 ea.
37-38 Heater-Defroster Switches. $3.50 ea. used
38 ser 41 Trunk Handle assembly, Needs Chrome $15.00
38 ser 40 Cyl Head-$50.00
38 ser 40 Intake Man. $15.00
38 ser 40 Short Block $100.00
38 ser 40 Transmisson- $75.00
38 Speedometer $10.00
38 Amps Gauge $5.00
38 Fuel Gauge $5.00
38 Glove Box Door with Clock $15.00
38- Bare Steering Wheel Frame- $25.00
38- Jack. Handle (no Base) $50.00
38-Steering Col & Gear Box $25.00
38 ser 41 Front Seat- Upholstery Junk- $15.00 Will Not Ship
38 Headlight Guts. Inside cans, Reflectors & Bulb sockets. $35.00 pr.
38 ser 40 Air Cleaner (Dry Type) Nice $25.00

Dave Lewis
1569 Wabash Ave.
Springfield, Illinois 62704
217-546-2600

(Cont.)

Dear Members.....

Please... Do what I have done. Go through your Parts and send me a list of all those parts you have been saving over the years. There are a lot of people that need them. They are doing no good hidden in your garage. A lot of us are keeping duplicate parts for our cars that we will never use. Lets help each other complete our cars. As an example I found a N.O.S. Left running board a guy had been saving for 20 years.

Thanks. Dave

GENUINE Buick PARTS

Parts Wanted

37--ser 46 Delco Comm. Cover #816340. Defroster Ducts & Tubes. Rear Brake Cable 4.779-#1299321. Rocker Arm Shaft. 4-16" Wheels. Body I.D. Plate. Connector Horn Cable 2.819 #263549. Lens Spring (Guide 918107). 2-Rear Shocks. Seat.

James P. Reikowsky
355 Claredon N.W.
Canton, Ohio 44708

38-ser 81-- Steering wheel-Front Floor Mat-Running Board Matting or like new boards-Trunk Mat-Dash Knobs-Grill Emblem-Bumpers and rear foot rest.

Allan Cohen
325 Stuart Ave.
Downington, PA. 19335

37-ser 90-- Running Boards- Running Board Moldings-Dome Light-2-Hand Holds for rear seat area.

J.D. Mech
2808 Kohler Memorial Dr.
P.O. Box 1003
Sheboygan WI. 53081
414-458-7239

---

37 ser 47-- Need a gas tank

Marvin Ray
RD 3 Box 273
Leechburg, PA. 15656

GENUINE Buick PARTS

Parts Wanted

---

38 46C Coupe, Conv. -- Running Board Moldings

Defroster & Heater Switches-Jack.. Also Need information on the interior behind the seat. Any one have some pictures???

Terry Tatum
Box 14758
Okla. City, Okla. 73113

---

38 Century Opera Coupe--R/F Grill-1-Turn signal lens-Jack & Base

Gigler's Body Shop
1355 Grove St.
SanFrancisco, Cal. 94117

---

37 ser 60 Coupe-- Running Boards-Dash Knobs. I also need the steel supports from the frame to fender for Side Mounts

George S. Gerberick
231 Morris
West Covina. Cal. 91790

---

38 ser 60-- Need the fender brace for the R.R. Fender

Brian Hamilton
P.O. Box 914
Seanhurst, WA. 98062
206-242-2868

GENUINE Buick PARTS

Parts Wanted

38-44 series-- Radio Knobs-Glove Box-Map Light- Center Grill Stainless Strip.

Richard E. Parkes
5243 Dallas Dr.
Kamloops, B.C.
Canada. V.Z.C. 4W4

---

38 ser 80 N.O.S. or Mint Hood Ornament. Also interested in any 80 ser. Parts

John Koutre
1301 Rainbow Drive
Stevens Point WI. 54481

---

38 ser 46S-- Heater Switch-Bumper Bolts-Sill Plates-Antenna R/S. Shocks-Front end parts and 4-16" Wheels.

James Rufener Jr.
Rt.1 Box 187
Isle, MN. 56342

---

38 ser 41-- Right Front Side Mount Fender and Center Grill Stainless Molding.

Carpet Gallery
21 E. Clinton St.
Newton, N.J. 07860
201-383-5435 Jay

---

38 66C--38 60 series engine- Torque Ball overhaul kit or at least large taper ~~gaske~~ seal.

C.W. Connelly
27 Mayfield Ave.
Ft. Thomas, Ky. 41075

GENUINE Buick PARTS

Parts Wanted

---

38 ser 40--Bracket to hold Oil Bath Air Cleaner to intake Manifold.
Local-Long Distance Knob for Radio

James R. Boutell

31716 Staman Circle Dr.
Farmington Hills. Mi. 48018

Help....Does anyone have any suggestions on putting power
sreering on my 37 40 ser. so my wife can drive....

Gene Slusser
Riverside Dr.
Contoocook NH. 03229
603-746-4631

---

37 40 ser. -- Need Fuel and Temperature gauges.

William Murray
2843 Olive Dr.
Cheyenne, WY. 82001

37-66S-- Running Boards-Sill Plates-Front Floor Mat and 15" Wheels.

Harold Peterson
102 Grove Street
Alma, MI. 48801
517-463-5072

---

38 41 ser. -- Stromberg or Marvel Carb. & Choke Assembly. Right
Rear Fender. Generator. Trunk Lid and interested
in any N.O.S. or N.O.R.S. interior trim parts.

Doug Becker
710 Executive Park Dr.
Greenwood Ind. 46142
317-881-4136

GENUINE Buick PARTS

Parts Wanted

---

37 41 Ser. Horn Ring. Stromberg Carb & Choke. Floor Mat. Sill Plates. Temp Gauge. Side Mount Chrome (LONG) Cowl Chrome (5"). Both Emer. Brk. Cables. All Parts Must Be Mint.

Mark Ryan
Rt. 7 Box 82
Brainerd. Minn. 56401

---

38 Ser 47 Both Running Board Moldings and Front Licience Plate Frame.

Craig Patton
1210 Dorthy Ave.
Phoenixville, PA. 19460

---

38 Ser 90L Need Two Wheels. Two Side Hood Louvers. Emer. Brk. Cable. Bumper Guard.

Ray Lawson
251 Nottingham
Troy, MI. 48098

---

37 Ser 46S Need Both Front Fenders with Side Mounts.

Geo. Ellcott
3176 Pikewood Ct.
Millford. MI. 48042
313-685-2804

GENUINE Buick PARTS

Parts Wanted

---

37 ser 41- Screw Jack (pictured in 37 Owners Manual) N.O.S. R/S Running Board. 37 or 38 40series fits. N.O.S or mint hood ornament. Tool Kit. Righ & Left (Mint Original) Spotlights. Right & Left Sidemount Mirrors. Buick emblem for Sidemount Cover. Need Trunk Mat Samples for size & Material. Want one for Sidemount Cars & Non Sidemount Trunk Boards. I will work on reproduction for others if someone will help. Also could use samples for Coupes. Anyone want to Help???? Please rush as I am going to Rubber Factory Jan 15th. For Re-production on Front Floor Mats.

Dave Lewis
1569 Wabash
Springfield, Illinois 62704
217-546-2600

38-46S Need Defroster & Switch

Don Micheletti
2023 Menalto Ave.
Menlow Park. Cal. 94025

37-41Ser. Need Door Sills. Front Floor Mat. Trunk Hindges. Defroster Connections. Cig. Lighter. Tools. Plastic Knobs. Center Grill Stainless Molding.

Mike Adler
7 Gettysburg Dr.
Englishtown, N.J. 07726

GENUINE Buick PARTS

Parts Wanted

---

38 41 Ser. Front Door Arm Rests (Good to Exc. only)
Glove Box Lock.

S. DeClario
2 Plumtree Ln.
Commalk, N.Y. 11725

---

38 41 Ser. Complete Jack Assembly

M.L. McIntyre
R4 Box 365
Corry. PA. 16407

The Buick SERIES NINETY *Limited*

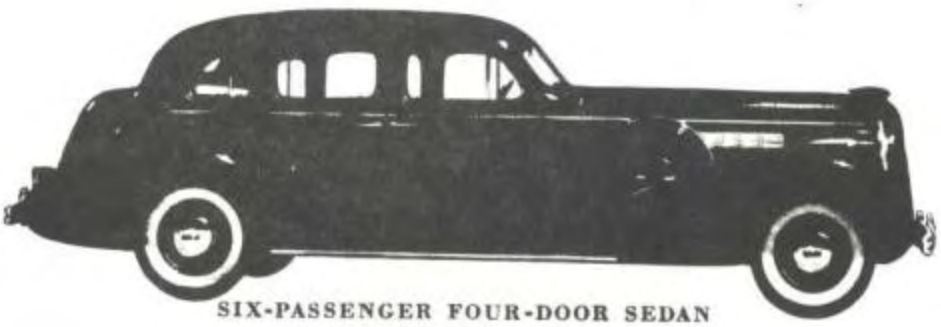

SIX-PASSENGER FOUR-DOOR SEDAN
Model No. 81, Trunk back

GENUINE Buick PARTS

Future Re-Production Plans:

I would like, with your help, to get into the reproduction of parts that are currently un available. To do this we need help in getting mint original parts for patterns and the company's capable of doing the job. If we can approach a company with a pattern and three to five hundred orders they will sit up and listen.....There are no company's in my area that do punch press work or casting so another member is going to have to volunteer some time to help us all.

The following are some of the parts I think we need in the future:

Trunk Mats for sedans & Coupes
Hood Ornaments
Running Board Mats To Fit like a Glove over Present Metal.
Center Grill Moldings
Defroster Ducts for 37, Above & Below Dash
Side Mount Emblems
Heater & Defroster Switches

We now have sources for three hard Items.
Front Floor Mats
Sill Plates
Dash Knobs & Map Lights (38)

Let's work on the other hard Items Together. We need paper pattern for trunk boards and Coupe rear seat Boards. anyone out there want this project? If so anyone with a good board for a pattern could mail the paper copy to anyone who could get the pattern re-produced on a large paper for the other members to purchase. There are companies in Cal. that make large paper patterns for Van Interiors. Does anyone in Cal. Know who does it. They would be the perfect Co. to contact after we get all the original Patterns from the members.

Members Note: This list of Vendors has been made up of the People I have either personnly dealt with or friends of mine have dealt with. They are all very reliable and give excellent service. You must remember.....Every person has had different experience with different companys. If you have had any trouble with any of these Companys let me know and maybe I Can help. If you have any company to add to the list let me know also. This list is made up soley to help members find services. Not to stimulate any one company. I will publish ony company that maintains a good reputation and serves the Hobby.

SIX-PASSENGER FOUR-DOOR FORMAL SEDAN
Model No. 81-F, Trunk back

The Buick SERIES EIGHTY *Roadmaster*

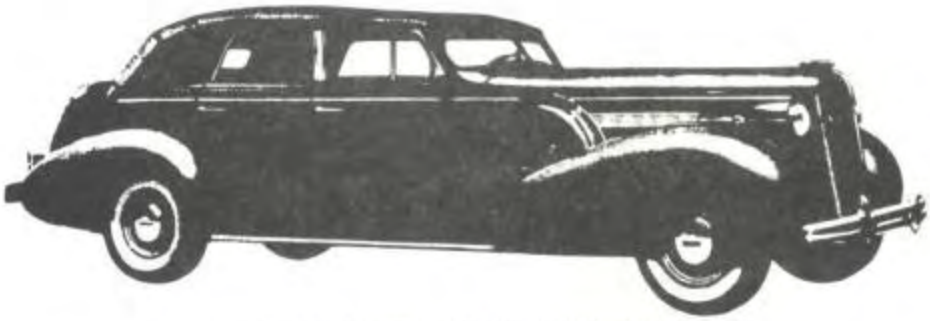

SIX-PASSENGER FOUR-DOOR PHAETON
Model No. 80-C, Trunk back. Fender well only

Coming Next Issue.....

Membership Rositer with evening phone numbers. Please only make your phone inquires after the dinner hour. Check the time zones so as not to call someone at midnight. You will want to save this because in the future we will only be printing new members.

Question & Answer Forum. I will research thru my sources the answers to any of your questions and publish the results.

Disputes: If you have an un resolved problem with another member or a vendor I will contact both parties for a written explanation of their side of the story. The results will be published for other members to decide who is in the right.

New Vendors; I will publish any new vendors that is serving the Hobby.

Feature: In each issue I will publish a story on one of our members letter. Send me some interesting stories on your Car.....

Commercial Feature: Each issue I will give a complete story on one of the vendors that caters to our cars. Will include their history, their products and services.

Closing Statement from the Editor:

Dear Buick Lovers, I hope you enjoyed our first Newsletter. I enjoyed making it very much and hope to continue with the publication. If you have any suggestion please write me. Hope to hear from you all soon

Dave Lewis, Editor

GENUINE Buick PARTS

37-38
SWAP N' SELL
NEWS BULLETIN
1569 WABASH AVE.
SPRINGFIELD, IL 62704

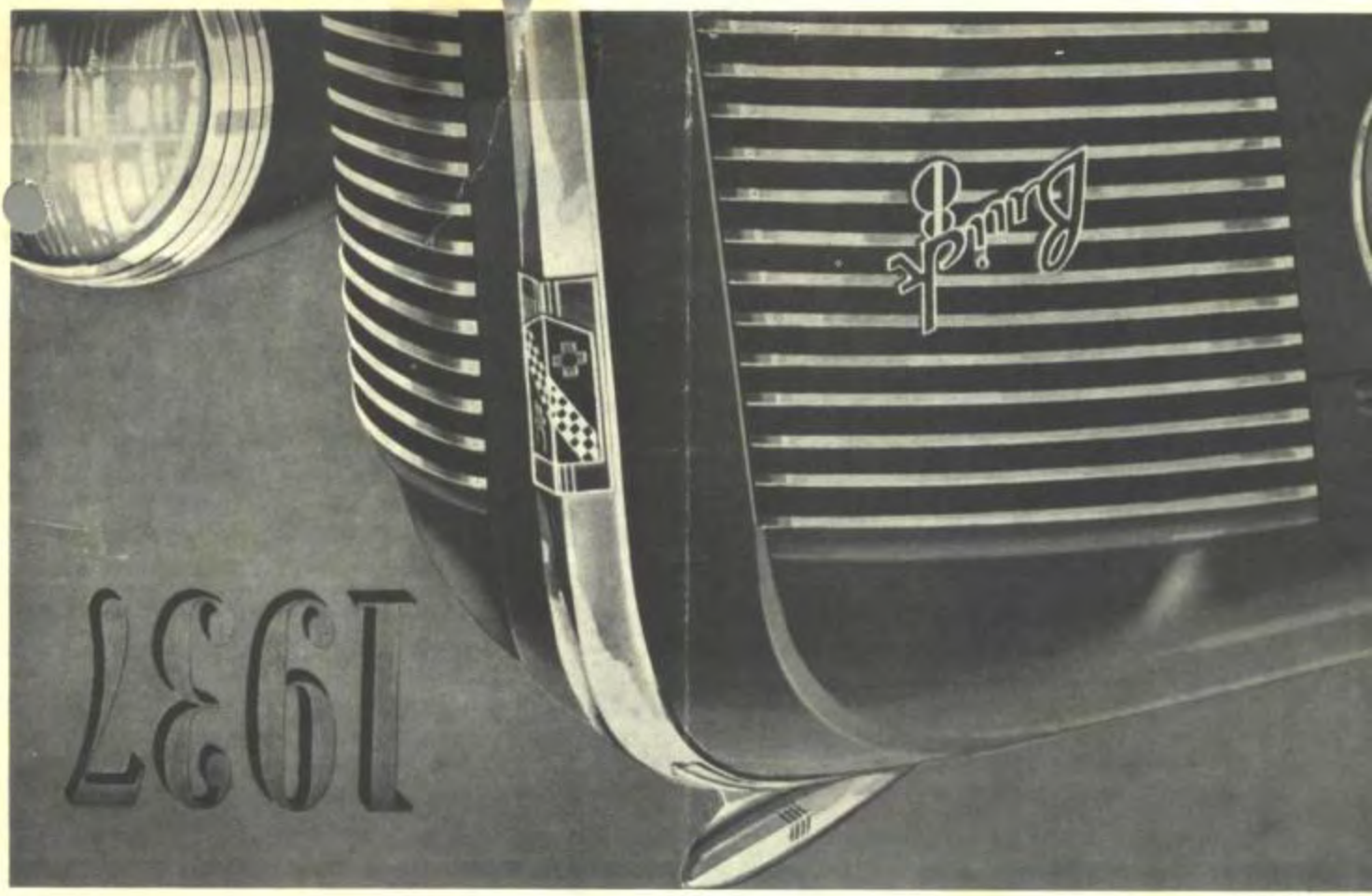

GENUINE Buick PARTS

37-38
SWAP N' SELL
NEWS BULLETIN

1569 WABASH AVE.
SPRINGFIELD, IL 62704

BULK RATE
U.S. Postage
PAID
Permit No. 75
Springfield, IL

[redacted]

VOL. 1 ISSUE 1